Document Delivering Robot

T. Yingthawornsuk, S. Suwannakhun, K. Kwansomkid, C. Anusak and P. Sopakham

***Abstract*— This study aims to develop a robotics system to deliver the documents and some small materials in the office. To respond and solve the problems of delivering documents with the required movement pattern, the navigation system is designed to for robot to detect the pathway inside building from one to another department within the same organization. The designed robotic system can operate on its movement between two locations from sender to receiver. Two major sensory units used to follow the movement of the robot are color sensor and ultrasonic sensor for line and obstacle detections and the security system to transfer documents and materials via scanning ID card of receiver who is authorized to have the right to access the document storage unit in a robot system. The RFID module has been employed for this security check and all data of the operating robot are also stored in an SD card used as recording unit for activities made by robot. As testing results shown, it revealed that the efficiency of robot operation in terms of mobility and security is highly satisfactory. The accurate percentage of completing task assignment by a robot is 90% from overall performance evaluation. The proposed robot prototype can assist us in terms of less work labor, reducing time, and more effective procedure of circulating documents within work place.**

***Keywords*— Motion Detection, RFID, Robot, Security**

I. Introduction

The communication and collaboration among small office units under big organization of company from on to another department are very important to get routine daily works completed as scheduled. Miscommunication could be happened and make different forms of body language and feeling expressions which can affect work in various manners.

Circulation of the documented information in a big company requires a transferring process which includes receiving and sending documents. The process is commonly used in various departments within organizations. For receiving or sending documents and materials in package, the operational personnel is required for the transfer of documents and materials used by walking, delivery and receiving from one location to another within organization. The document delivering process can be facing all the various problems such as a time consuming for personnel to deliver and receive documents or packages and so on. As a result, the service personnel experiences fatigue or reduced work efficiency. Especially in case of delivery for getting many documents and stuffs to all hands of receivers, as a result, the solution to meet the high demand of the reception and delivery cycle is required for increasing number of transactions to catch up such demands of delivery by service personnel.

Regarding the mentioned issue above, the research team has designed and invented a robot to work in replacement of service personnel for document delivery. Inside the office to meet and solve the problem of document and material delivery the robot has a transportation system built in for movement that can be programmed and scheduled for sending and receiving from internal organizations.

The TCRT 5000 is used to detect trajectories and it has an Ultrasonic sensor unit to detect the obstacles on a pathway and sound alarming unit when the obstacle is detected. There is also a safety unit for scanning the ID card embedded in a robot to grand an access for receiver who is authorized to get the document in storage on robot. This proposed robot prototype has its advantages in saving time of delivering documents, precise delivery to the right receivers and all transactions history recorded for tracking assigned tasks.

II. Related Work

K. Bhaskar et al. [1] suggested the intelligent service robots can be of significant use at places where frequent services are delivered. This researcher group developed a mail delivery robot which has the feature of being controlled through a mobile phone by the operator. A scaled-down model is developed and has worked successfully.

R. Simmons et al. [2] composed of four abstraction layers that have obstacle avoidance, navigation, path planning, and task scheduling. The layers are independent, communicating processes that are always active, processing sensory data and status information to update their decisions and actions.

K. Ishii et al. [3] proposed an electric power management system for delivering power to home appliances with mobile robots. A mobile robot provides the appliance with the electric power required for its operation. In addition to providing explanations of a usage scenario and theoretical analysis. they demonstrate a prototype implementation. The robot prototype autonomously locates the targeted appliance, transfers its battery power to the appliance and returns to the base station to recharge its battery.

T. Yingthawornsuk is with King Mongkut's University of Technology Thonburi, Thailand.

S. Suwannakhun is with King Mongkut's University of Technology Thonburi, Thailand.

K. Kwansomkid is with King Mongkut's University of Technology Thonburi., Thailand.

C. Anusak is with King Mongkut's University of Technology Thonburi, Thailand.

P. Sopakham is with King Mongkut's University of Technology Thonburi, Thailand.

S. Hashimoto et al. [4] expected that a photograph can be a useful teaching tool for a robot to complete task assignments. The novel human-robot interaction using photographs was proposed. A user shows a photo of target to the system to physically execute the task. Researchers developed a system prototype in which the robot deliver can arrange the dishes in the same arrangement way on a dining table as shown in photo.

J. Jean et al. [5] utilized the embedded system to realize the speech recognition and the interactive dialogue capabilities. The single chip called AT-mega168 was used to implement the detection of sound sources, touch sensing, and the remote-control function with Wii Num-chuk interface. For the delivery services, two seven-degree-of-freedom manipulators were mounted on the shoulders of robot to facilitate delivery tasks.

S. Jeon et al. [6] proposed an exhaustive search algorithm that reduces the computational resource for finding the shortest path while promising global minimum solution. This algorithm derives the shortest path that visits multiple positions by finding possible combinations with minimum iteration of the function. Applying distance matrix to the generated combination result is a travel distance that can be derived. The simulation result based on proposed algorithm shows the increasing delivery efficiency in robot.

H. Wang et al. [7] introduced a new type of master-slave vascular interventional robot with reliable clamping of the catheter. An adaptive sliding controller based on master-slave tracking was designed. Through experiments and analysis of the fuzzy sliding mode controller (FSMC), the robot performed tracking with strong robustness.

Y. Hada et al. [8] presented the mobile robots work in populated environments, such as offices, hospitals, and health care facilities. A service robot was built to deliver parcels, letters, or documents in such an environment. All design, architecture and implementation of this robotic system are presented in their published paper.

M. M. Abrar et al. [9] have proposed a prototype robot that can be very helpful to reduce the risk of infectious disease transmission in the product delivery system during the extreme strain on healthcare and hygiene.

The robot ensures a secure and human-contactless delivery by using a password protected container to carry the delivery package. After completing the delivery, the robot can autonomously return to its starting point of the route.

M. K. Lee et al. [10] designed the Snackbot that can deliver snacks in university buildings. The robot is intended to provide the useful and continuing service, and to serve as a research platform for long-term Human-Robot Interaction. Documented as a contribution for others in HRI who may be developing social robots that offer services.

III. Methodology

A. Microcontroller

Microcontroller is a small computer which is necessary for controlling of robot to process as an operational program designed to control its hardware. If the proper program has not been installed, robot will not work properly as designed. Microcontroller is functional as the human brain to control hardware that is very similar to limbs in human body.

B. Arduino Unit

The open-source microcontroller board is purposely designed to operate both hardware and software with ease of use. The Arduino Mega 2560 used in this work to play an important role in getting the output of hardware units to compute and integrate into a main robotic system.

C. Hardware

In hardware implementation, we used the Sensor TCRT 5000, Keypad 4x4, L298N motor drive, 3.5” TFT LCD, Ultrasonic HC-SR04, Buzzer Module, RFID Module, Micro SD Card Module, Battery lithium polymer 12V, 12Ah as compartments in robot.

D. Software

A set of written programs used to control the operation of a computer by software that we implement coding to write data and commands. The Arduino IDE was used in this work.

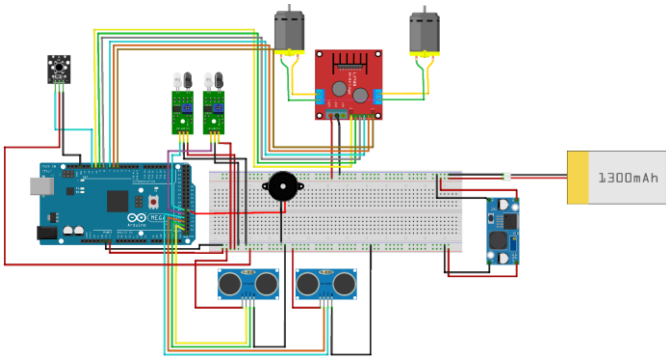

Fig. 1. Hardware diagram of the motion system.

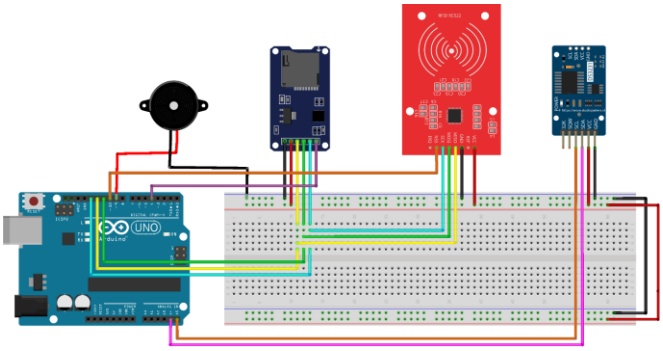

Fig. 2. Card scanning, sound and data recording units,

IV. Implementation

A. Work procedure

First, data gathering on the related problems and theories was made. Second, designing the structure and drive system of the robot was performed. Third, the hardware implementation and assemble of the robotic structure and the drive system were

made. Fourth, the instruction program on the microcontroller to send commands to control motion system. Fifth, testing software and hardware. Sixth, design and implement the instruction program on the microcontroller to control the operation of the menu system. Seventh, collecting and analyzing the results from all operations to modify for more corrective action of robot.

Fig. 3. Delivery robot model for workplace.

B. *Operation of the robot movement*

When the button is pressed, the robot will be instructed to start moving from the beginning to the destination as programed. When the robot moves away from the designed path, it will send a bit "0" from sensor to microcontroller. When accelerating, the motor balances its motion to stay in a path and when the robot reaches the destination, the robot receives "0" bits from both sensors, which means that all movements will stop and wait for the next order.

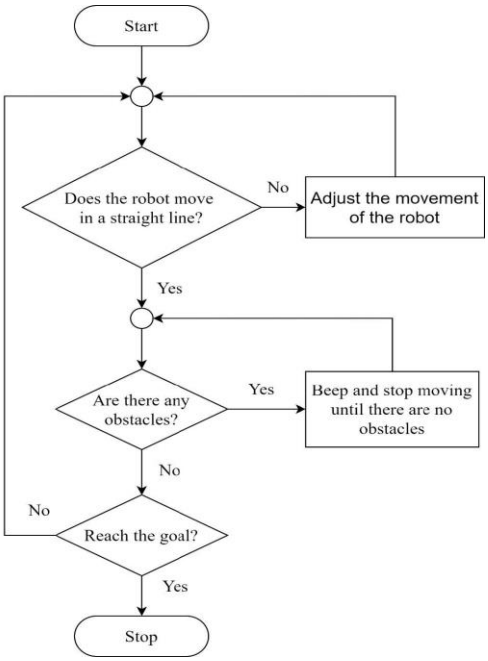

Fig. 4. Flowchart of the robot's movement

V. Results and Discussion

A. *The testing results of the operation of menu system*

The results of testing the overall menu system operation on the security system in the receipt of the package of the menu are found to be 80 % of accuracy. Identity check was tested on user as a recipient of the parcel with the Receiver menu, which was found in good condition.

Fig. 5. Display of menu system

B. *Testing results of robot motion*

According to the results of the test, the robot moving with obstacles blocking the pathway. It was found that there is no hit to obstacles. Due to the hardware used in conjunction with the robot motion system, it is highly efficient detection by using the ultrasonic sensor with the ultrasonic distance measurement. By sending ultrasonic wave to reflect distance to objects blocking the pathway the detection of obstacle is achieved effectively.

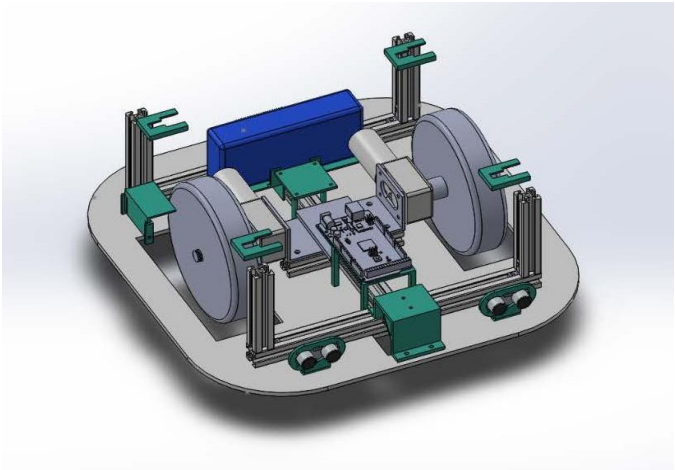

Fig. 6. The design of the robot motion

C. *Testing results of robot movement in conjunction with the operation of menu system*

According to the results of the test, the motion along with the security system, it was found that the average accuracy of the

overall operation is 70 %. This low accuracy depends on some failure on the movement of robot to the targeted location and the malfunction of RFID Module, while receiving the delivery from the sender. In the meantime, the movement of the robot horn has taken off a set path since the start of the operation. There were instances where a crash occurred while the robot spins to return to its starting point.

TABLE I: TESTING RESULTS OF THE ROBOT MOVEMENT IN CONJUNCTION WITH THE OPERATION OF MENU SYSTEM.

Test No.	Displacement from Point A to B	Displacement from Point B to A	The operation of menu system
1	Yes	Yes	Yes
2	Yes	No	Yes
3	Yes	Yes	Yes
4	Yes	Yes	Yes
5	No	Yes	Yes
6	Yes	Yes	Yes
7	Yes	Yes	Yes
8	Yes	Yes	Yes
9	Yes	Yes	No
10	Yes	Yes	Yes

VI. CONCLUSION

In the preparation of a robot to deliver documents and small parcels inside the offices in organization, this work can be attained including the working principle of various hardware integrated together in work and built as the automated system to solve problems and reduce the time of delivery of documents within the organization. According to the results of the experiments from testing the movement of robot to the receiver, 80 % was found under normal operation. The 20% in error occurred from the security system and card scanning errors. In overall performance to deliver the documents and materials for the entire robot system, the fairly 70% accuracy to complete assignments can be concluded for our proposed robot. In both mobility and security system a robot can reach the goal and deliver documents. In future work, the modification on hardware will be a major focus to perform assignment more precisely.

ACKNOWLEDGMENT

Media Technology Curriculum, King Mongkut's University of Technology Thonburi (KMUTT), Thailand.

REFERENCES

[1] K. Bhaskar, A. Mansooor, K. R. P. Anand and A. Ramani, "Intelligent mail delivery robot," 2011 2nd International Conference on Intelligent Agent & Multi-Agent Systems, Chennai, 2011, pp. 1-6, doi: 10.1109/IAMA.2011.6048994.

[2] R. Simmons et al., "A layered architecture for office delivery robots", Proc. of First International Conference on Autonomous Agents, pp. 245-252, 1997. https://doi.org/10.1145/267658.267723

[3] K. Ishii, Y. Kamiyama, W. Chaochaisit, M. Inami and T. Igarashi, "Delivering electricity to home appliances by mobile robots," 2014 IEEE International Conference on Robotics and Automation (ICRA), Hong Kong, 2014, pp. 6375-6381, doi: 10.1109/ICRA.2014.6907800.

[4] S. Hashimoto, A. Ostanin, M. Inami and T. Igarashi, "Photograph-based interaction for teaching object delivery tasks to robots," 2010 5th ACM/IEEE International Conference on Human-Robot Interaction (HRI), Osaka, 2010, pp. 153-154, doi: 10.1109/HRI.2010.5453218.

[5] J. Jean, C. Wei, Z. Lin and K. Lian, "Development of an office delivery robot with multimodal human-robot interactions," 2012 Proceedings of SICE Annual Conference (SICE), Akita, 2012, pp. 1564-1567.

[6] S. Jeon and J. Lee, "Vehicle routing problem with pickup and delivery of multiple robots for hospital logistics," 2016 16th International Conference on Control, Automation and Systems (ICCAS), Gyeongju, 2016, pp. 1572-1575, doi: 10.1109/ICCAS.2016.7832511.

[7] H. Wang, J. Chang, H. Yu, H. Liu, C. Hou and H. Lu, "Research on a Novel Vascular Interventional Surgery Robot and Control Method Based on Precise Delivery," in IEEE Access, doi: 10.1109/ACCESS.2021.3057425.

[8] Y. Hada, H. Gakuhari, K. Takase and E. I. Hemeldan, "Delivery service robot using distributed acquisition, actuators and intelligence," 2004 IEEE/RSJ International Conference on Intelligent Robots and Systems (IROS) (IEEE Cat. No.04CH37566), Sendai, 2004, pp. 2997-3002 vol.3, doi: 10.1109/IROS.2004.1389865.

[9] M. M. Abrar, R. Islam and M. A. H. Shanto, "An Autonomous Delivery Robot to Prevent the Spread of Coronavirus in Product Delivery System," 2020 11th IEEE Annual Ubiquitous Computing, Electronics & Mobile Communication Conference (UEMCON), New York City, NY, 2020, pp. 0461-0466, doi: 10.1109/UEMCON51285.2020.9298108.

[10] M. K. Lee et al., "The Snackbot: Documenting the design of a robot for long-term Human-Robot Interaction," 2009 4th ACM/IEEE International Conference on Human-Robot Interaction (HRI), La Jolla, CA, 2009, pp. 7-14. https://doi.org/10.1145/1514095.1514100

Thaweesak Yingthawornsuk works with department of Media Technology, King Mongkut's University of Technology Thonburi, Thailand. He graduated for Ph.D. degree in Electrical Engineering from Vanderbilt University, TN, USA in 2007.

Sirimonpak Suwannakhun works with department of Media Technology, King Mongkut's University of Technology Thonburi, Thailand. She graduated for Ph.D. degree in Program Learning Innovation and Technology, at Faculty of Industrial Education and Technology, King Mongkut's University of Technology Thonburi (KMUTT), Bangkok, Thailand in 2017.

Kantapat Kwansomkid studies with department of Media Technology, King Mongkut's University of Technology Thonburi, Thailand. He graduated from Bangpakok Wittayakom school, Thailand in 2020 with Science and Mathematics degree.

Chutimon Anusak graduated for Bachelor's degree in of Media Technology, King Mongkut's University of Technology Thonburi (KMUTT), Bangkok, Thailand in 2019.

Panuwat Sopakham graduated for Bachelor's degree in of Media Technology, King Mongkut's University of Technology Thonburi (KMUTT), Bangkok, Thailand in 2019.